Adafruit CCS811 Air Quality Sensor

Created by Dean Miller

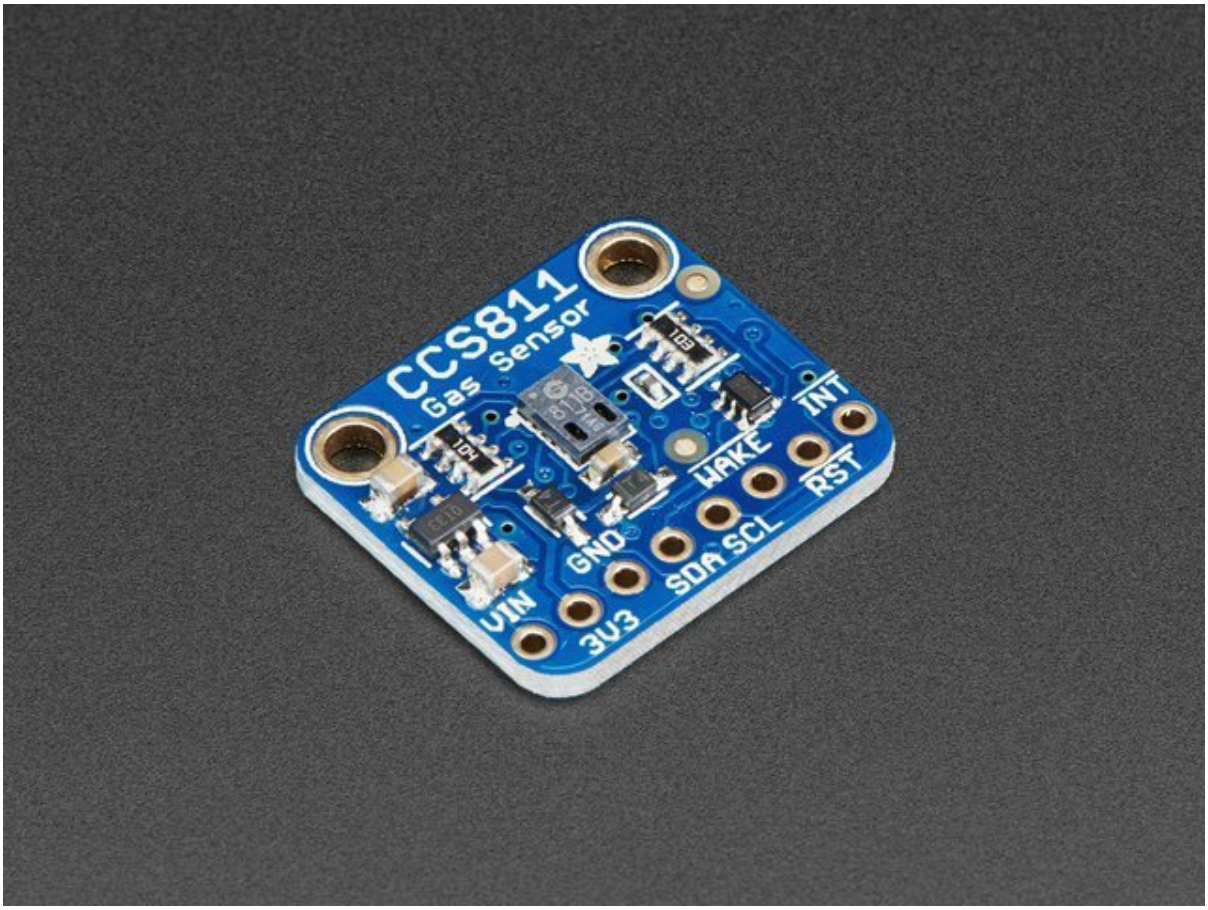

https://learn.adafruit.com/adafruit-ccs811-air-quality-sensor

Last updated on 2024-03-08 02:38:49 PM EST

Table of Contents

Overview 3

Pinouts 6

- Power Pins:
- Logic pins:
- Other Pins:

Assembly 8

- Prepare the header strip:
- Add the breakout board and Solder:
-

Arduino Wiring & Test 10

- I2C Wiring
- Download Adafruit_CCS811 library
- Load Test Example
- Library Reference

Arduino Library Docs 14

Python & CircuitPython 14

- CircuitPython Microcontroller Wiring
- Python Computer Wiring
- CircuitPython Installation of CCS811 Library
- Python Installation of CCS811 Library
- CircuitPython & Python Usage
- Full Example Code

Python Docs 19

Downloads 19

- Documents
- Schematic and Fab Print for STEMMA QT Version
- Schematic and Fab Print for Original Version

FAQ 21

Overview

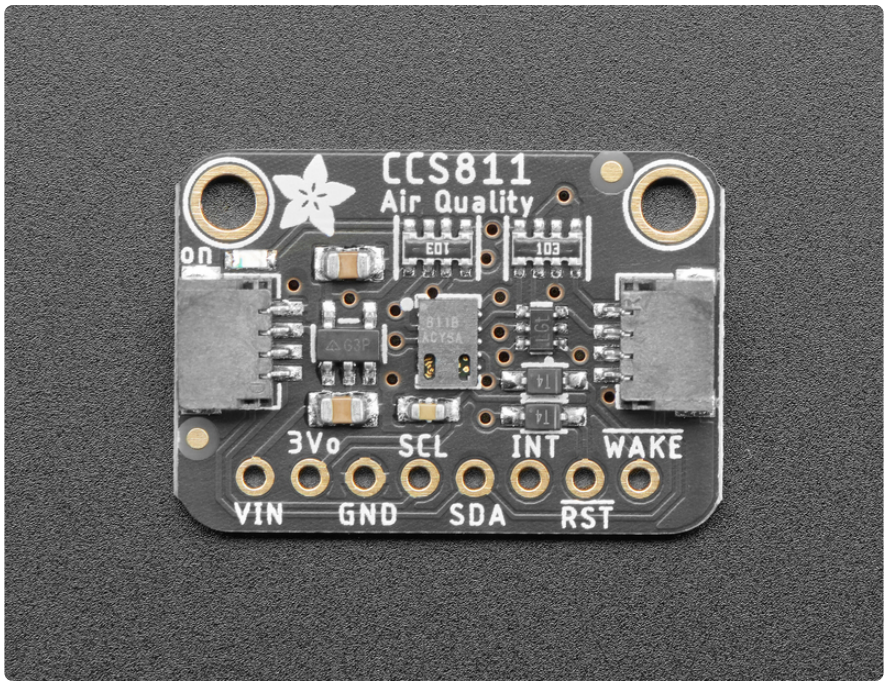

Breathe easy - we finally have an I2C VOC/eCO2 sensor in the Adafruit shop! Add air quality monitoring to your project and with an **Adafruit CCS811 Air Quality Sensor Breakout**. This sensor from AMS is a gas sensor that can detect a wide range of Volatile Organic Compounds (VOCs) and is intended for indoor air quality monitoring. When connected to your microcontroller (running our library code) it will return a Total Volatile Organic Compound (TVOC) reading and an equivalent carbon dioxide reading (eCO2) over I2C.

This sensor is not well supported on Raspberry Pi. This is because it uses I2C clock stretching which the Pi cannot do without drastically slowing down the I2C speed. CircuitPython and Arduino are supported.

This chip USED to support a thermistor for temperature sensing, but it no longer does. Please use an external temperature sensor!

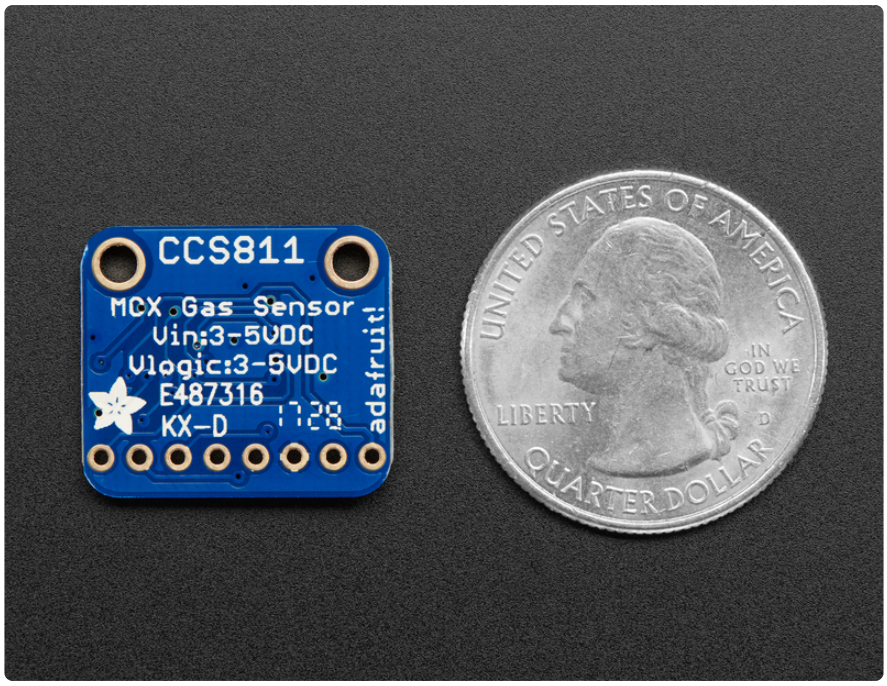

The CCS811 has a 'standard' hot-plate MOX sensor, as well as a small microcontroller that controls power to the plate, reads the analog voltage, and provides an I2C interface to read from.

This part will measure **eCO2** (equivalent calculated carbon-dioxide) concentration within a range of 400 to 8192 parts per million (ppm), and **TVOC** (Total Volatile Organic Compound) concentration within a range of 0 to 1187 parts per billion (ppb). According to the fact sheet it can detect Alcohols, Aldehydes, Ketones, Organic Acids, Amines, Aliphatic and Aromatic Hydrocarbons.

Please note, this sensor, like all VOC/gas sensors, has variability and to get precise measurements you will want to calibrate it against known sources! That said, for general environmental sensors, it will give you a good idea of trends and comparisons.

AMS recommends that you run this sensor for 48 hours when you first receive it to "burn it in", and then 20 minutes in the desired mode every time the sensor is in use. This is because the sensitivity levels of the sensor will change during early use.

The CCS811 has a configurable interrupt pin that can fire when a conversion is ready and/or when a reading crosses a user-settable threshold. The CCS811 supports multiple drive modes to take a measurement every 1 second, every 10 seconds, every 60 seconds, or every 250 milliseconds.

For your convenience we've pick-and-placed the sensor on a PCB with a 3.3V regulator and some level shifting so it can be easily used with your favorite 3.3V or 5V microcontroller.

We've also prepared software libraries to get you up and running in Arduino or CircuitPython with just a few lines of code!

The breakout is made in the **STEMMA QT** form factor (https://adafru.it/LBQ), making them easy to interface with. The STEMMA QT connectors (https://adafru.it/JqB) on either side are compatible with the SparkFun Qwiic (https://adafru.it/Fpw) I2C connectors. This allows you to make solderless connections between your development board and the BME280 or to chain it with a wide range of other sensors and accessories using a **compatible cable** (https://adafru.it/JnB).

There are two versions of this board - the STEMMA QT version shown above, and the original header-only version shown below. Code works the same on both!

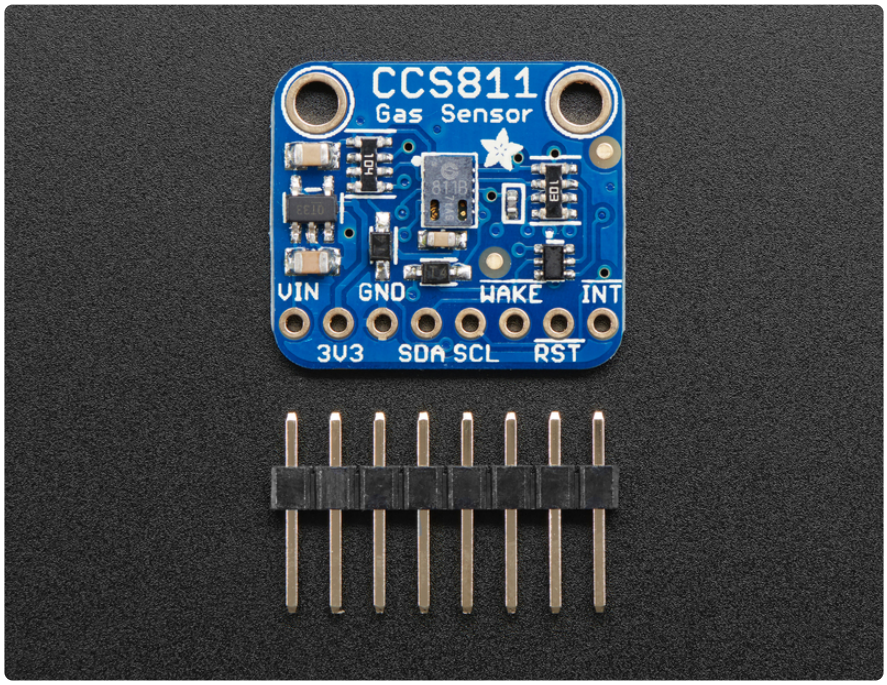

Pinouts

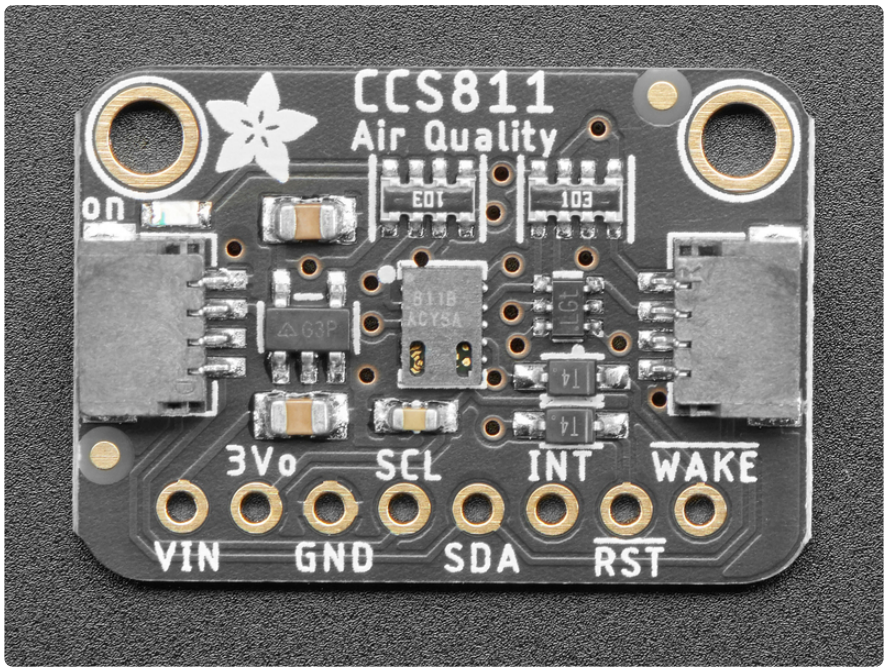

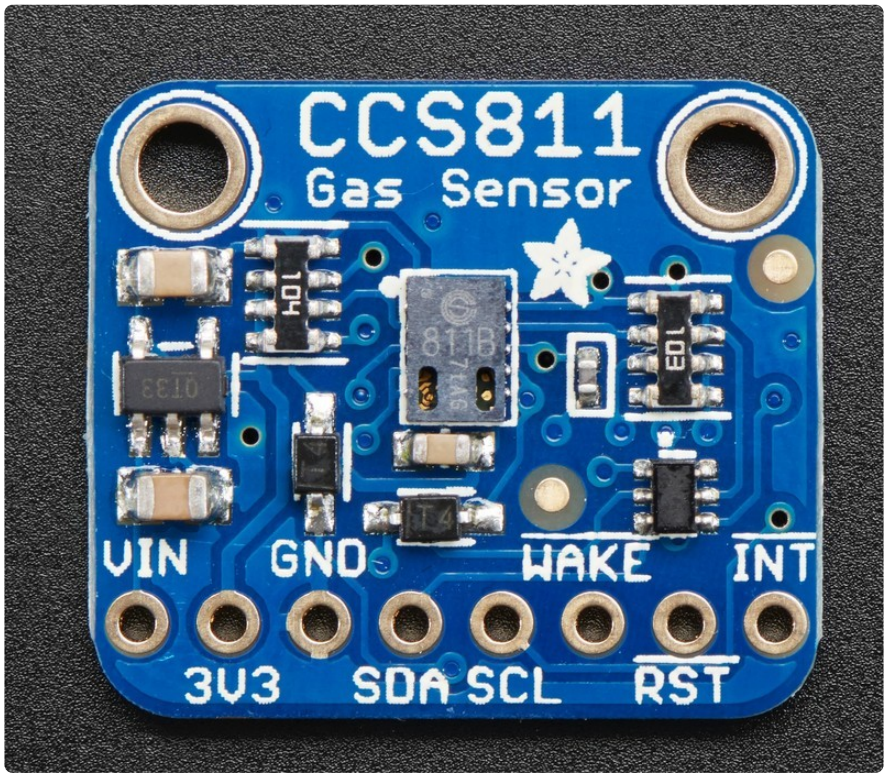

This sensor has 2 mounting holes and one header breakout strip.

Power Pins:

- **Vin** - this is the power pin. Since the sensor uses 3.3V, we have included an onboard voltage regulator that will take 3-5VDC and safely convert it down. To

power the board, give it the same power as the logic level of your microcontroller - e.g. for a 5V micro like Arduino, use 5V
- **3Vo** - this is the 3.3V output from the voltage regulator, you can grab up to 100mA from this if you like
- **GND** - common ground for power and logic

Logic pins:

- **SCL** - this is the I2C clock pin, connect to your microcontrollers I2C clock line. There is a 10K pullup on this pin and it is level shifted so you can use 3 - 5VDC.
- **SDA** - this is the I2C data pin, connect to your microcontrollers I2C data line. There is a 10K pullup on this pin and it is level shifted so you can use 3 - 5VDC.
- **STEMMA QT** (https://adafru.it/Ft4) **-** These connectors allow you to connectors to dev boards with **STEMMA QT** connectors or to other things with various associated accessories (https://adafru.it/Ft6)

Other Pins:

- **INT** - this is the interrupt-output pin. It is 3V logic and you can use it to detect when a new reading is ready or when a reading gets too high or too low.
- **WAKE** - this is the wakeup pin for the sensor. It needs to be pulled to ground in order to communicate with the sensor. This pin is level shifted so you can use 3-5VDC logic.
- **RST** - this is the reset pin. When it is pulled to ground the sensor resets itself. This pin is level shifted so you can use 3-5VDC logic.

Assembly

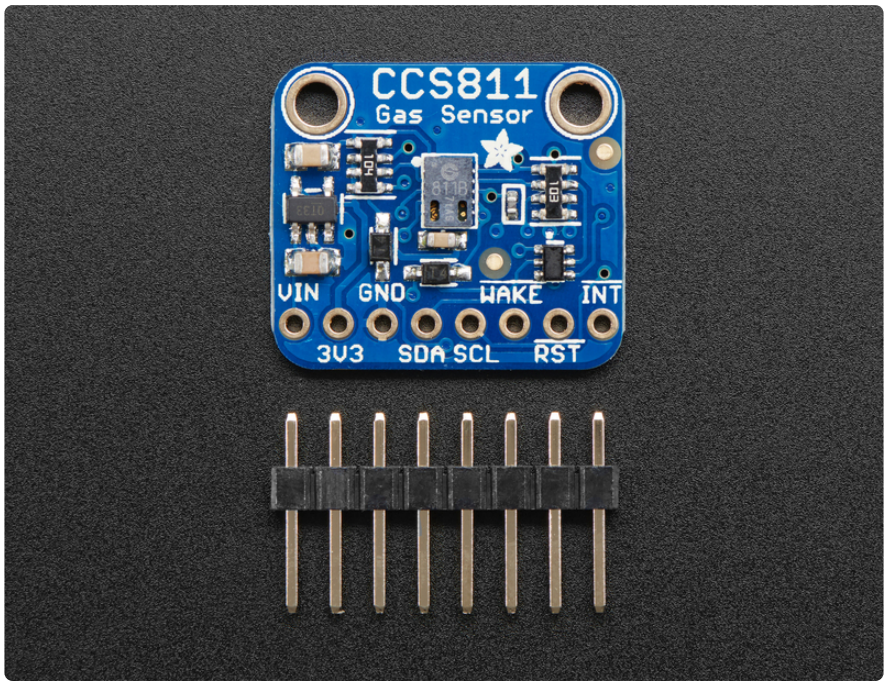

Before use, you'll need to attach headers so you can plug in this sensor into a breadboard. Soldering is essential!

Note we show images of the BME280 sensor, which looks similar - the process is the same as it would be for the CCS811

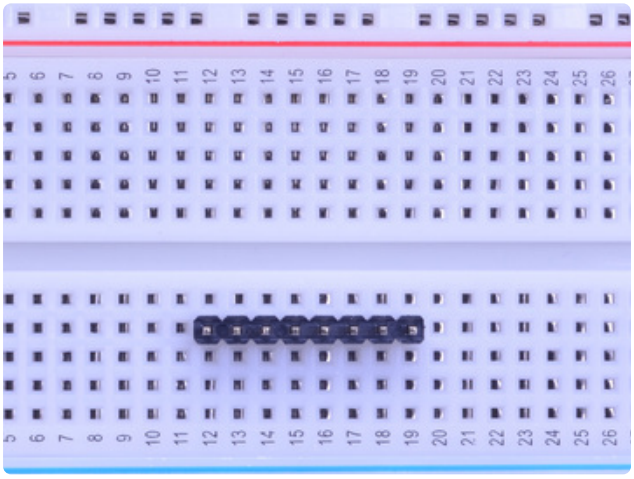

Prepare the header strip:

Cut the strip to length if necessary. It will be easier to solder if you insert it into a breadboard - **long pins down**

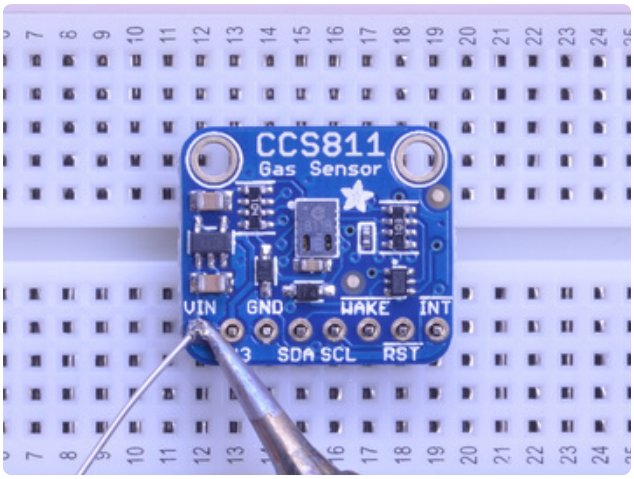

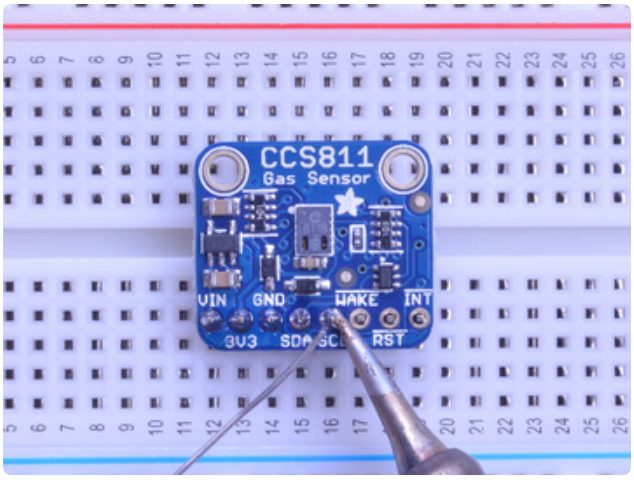

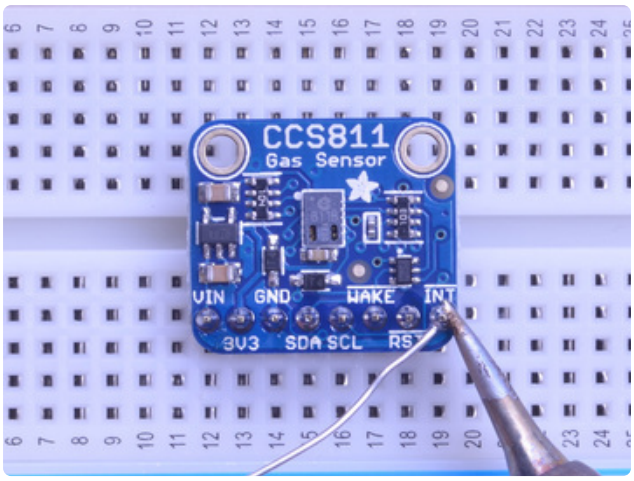

Add the breakout board and Solder:

Place the breakout board over the pins so that the short pins poke through the breakout pads

Be sure to solder all pins for reliable electrical contact.

(For tips on soldering, be sure to check out our Guide to Excellent Soldering (https://adafru.it/aTk)).

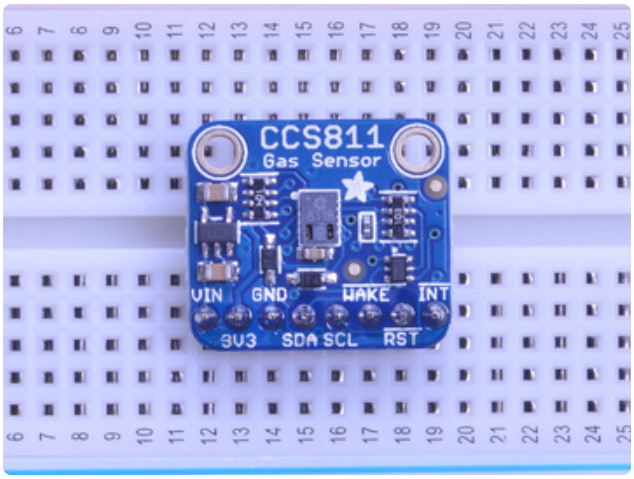

You're done!

Arduino Wiring & Test

You can easily wire this breakout to any microcontroller, we'll be using an Adafruit Metro (Arduino compatible) with the Arduino IDE. But, you can use any other kind of microcontroller as well as long as it has I2C clock and I2C data lines. Note this chip uses clock stretching so make sure your microcontroller supports that in hardware!

I2C Wiring

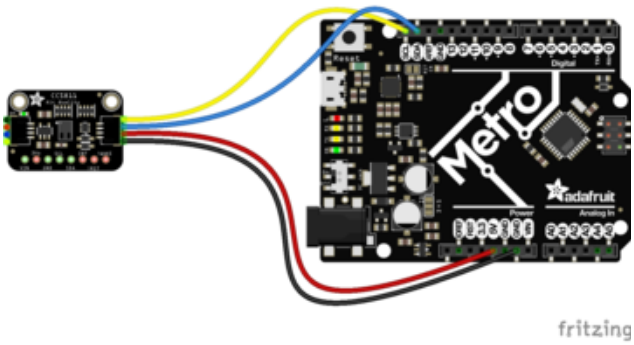

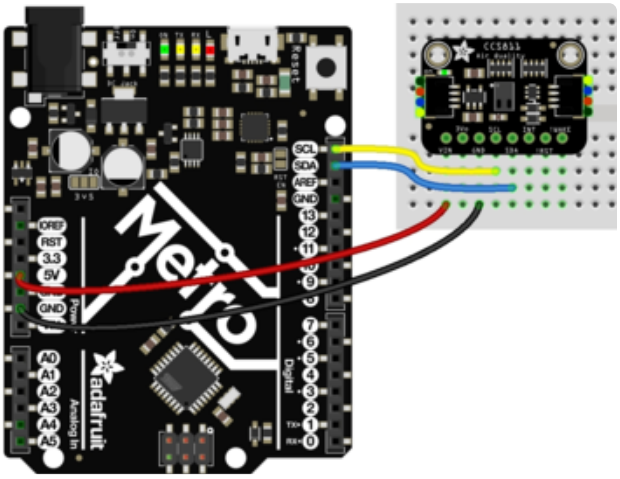

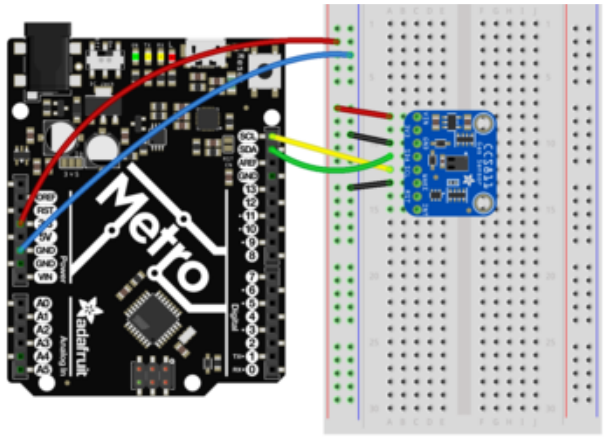

Connect **Vin (red wire on STEMMA QT version)** to the power supply, 3-5V is fine. Use the same voltage that the microcontroller logic is based off of. For most Arduinos, that is 5V

Connect **GND (black wire on STEMMA QT version)** to common power/data ground

Connect the **SCL (yellow wire on STEMMA QT version)** pin to the I2C clock **SCL** pin on your Arduino.

On an UNO & '328 based Arduino, this is also known as **A5**, on a Mega it is also known as **digital 21** and on a Leonardo/ Micro, **digital 3**

Connect the **SDA (blue wire on STEMMA QT version)** pin to the I2C data **SDA** pin on your Arduino.

On an UNO & '328 based Arduino, this is also known as **A4**, on a Mega it is also known as **digital 20** and on a Leonardo/ Micro, **digital 2**

NOT NEEDED FOR STEMMA QT VERSION: Connect the **WAKE** pin to ground **on the original version only.**

This sensor uses I2C address **0x5A**.

Don't forget to tie WAKE to Ground - this is required on the original version of this board only!

Download Adafruit_CCS811 library

To begin reading sensor data, you will need to download **Adafruit_CCS811** from the Arduino library manager.

Open up the Arduino library manager:

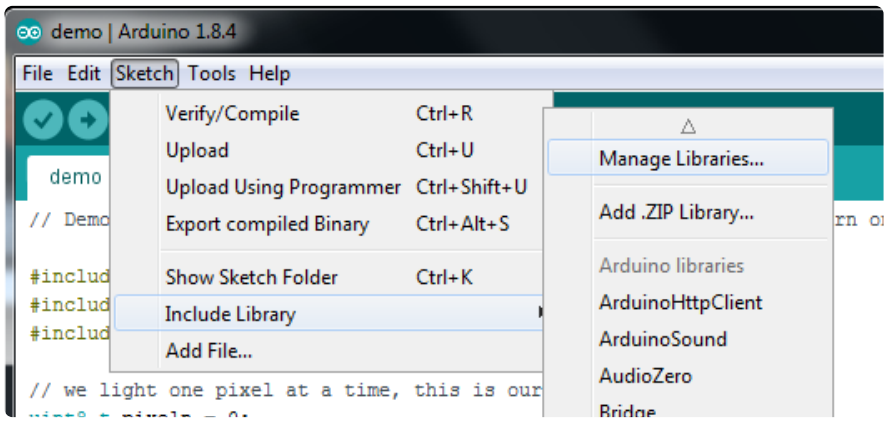

Search for the **Adafruit CCS811** library and install it

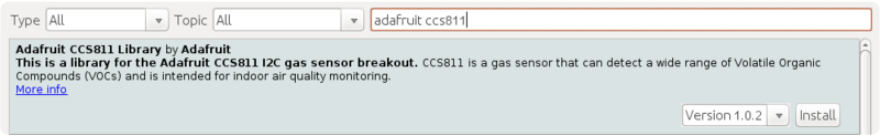

We also have a great tutorial on Arduino library installation at: http://learn.adafruit.com/adafruit-all-about-arduino-libraries-install-use (https://adafru.it/aYM)

Load Test Example

Open up **File->Examples->Adafruit_CCS811->CCS811_test** and upload to your Arduino wired up to the sensor. This example connects to the sensor and starts taking readings.

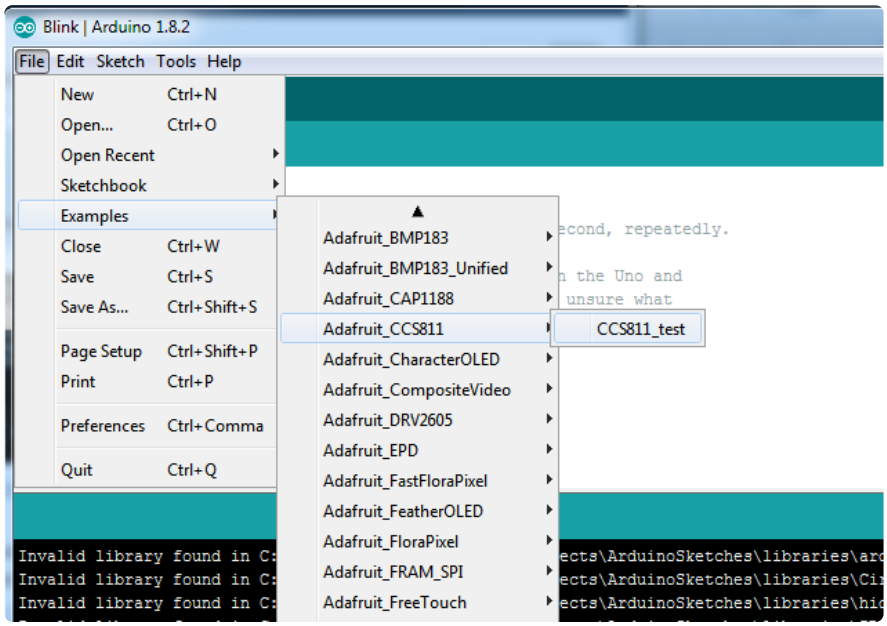

Once uploaded to your Arduino, open up the serial console at 9600 baud speed to see the readings. Your sensor will take 3 zero readings while it does some internal calibration and correction things and then start outputting real data. In clean air and a typical indoor space your serial monitor will look something like this:

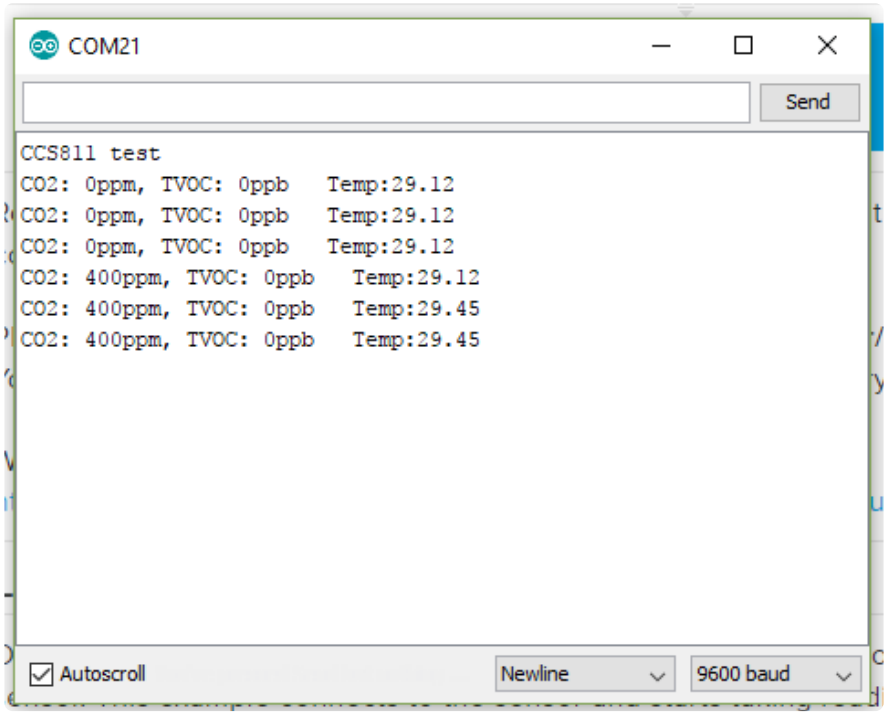

AMS recommends that you run this sensor for 48 hours when you first receive it to "burn it in", and then 20 minutes in the desired mode every time the sensor is in use. This is because the sensitivity levels of the sensor will change during early use.

Library Reference

To create the object, use

```
Adafruit_CCS811 ccs;
```

initialize the sensor with:

```
if(!ccs.begin()){
    Serial.println("Failed to start sensor! Please check your wiring.");
    while(1);
  }
```

To poll the sensor for available data you can use:

```
bool dataAvailable = ccs.available(); //returns true if data is available to be read
```

Data can be read using:

```
bool error = ccs.readData(); //returns True if an error occurs during the read
```

and then the readings can be accessed with:

```
int eCO2 = ccs.geteCO2(); //returns eCO2 reading
int TVOC = ccs.getTVOC(); //return TVOC reading
```

Approximate ambient temperature can be read using:

```
float temp = ccs.calculateTemperature();
```

Arduino Library Docs

Arduino Library Docs (https://adafru.it/Au8)

Python & CircuitPython

It's easy to use the CCS811 sensor with Python or CircuitPython, and the Adafruit CircuitPython CCS811 (https://adafru.it/yaX) module. This module allows you to easily write Python code that reads the eCO2, TVOC and temperature from the sensor.

You can use this sensor with any CircuitPython microcontroller board or with a computer that has GPIO and Python thanks to Adafruit_Blinka, our CircuitPython-for-Python compatibility library (https://adafru.it/BSN).

CircuitPython Microcontroller Wiring

First wire up a CCS811 to your board exactly as shown on the previous pages for Arduino. Here's an example of wiring a Feather to the sensor with I2C:

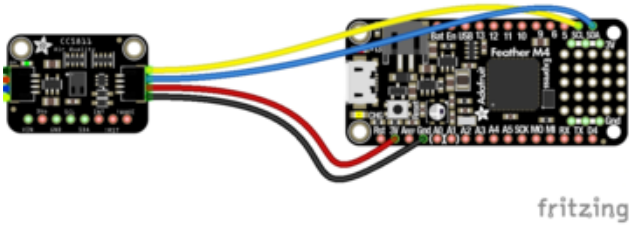

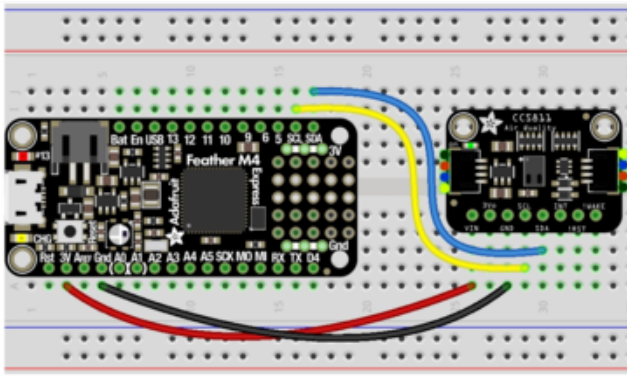

Board 3V to **sensor VIN (red wire on STEMMA QT version)**
Board GND to **sensor GND (black wire on STEMMA QT version)**
Board SCL to **sensor SCL (yellow wire on STEMMA QT version)**
Board SDA to **sensor SDA (blue wire on STEMMA QT version)**
Board GND to **sensor WAKE (NOT NEEDED ON STEMMA QT VERSION)**

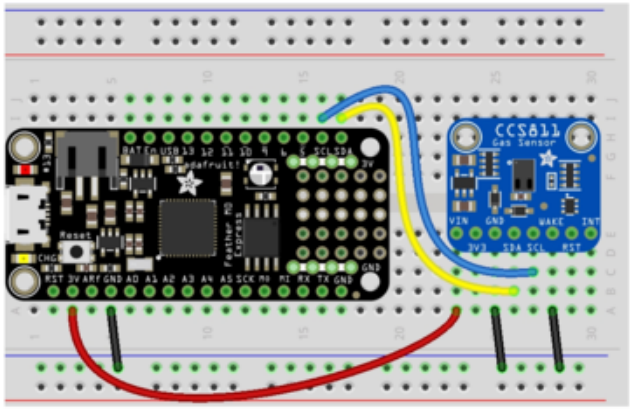

Python Computer Wiring

Since there's dozens of Linux computers/boards you can use we will show wiring for Raspberry Pi. For other platforms, please visit the guide for CircuitPython on Linux to see whether your platform is supported (https://adafru.it/BSN).

Here's the Raspberry Pi wired with I2C:

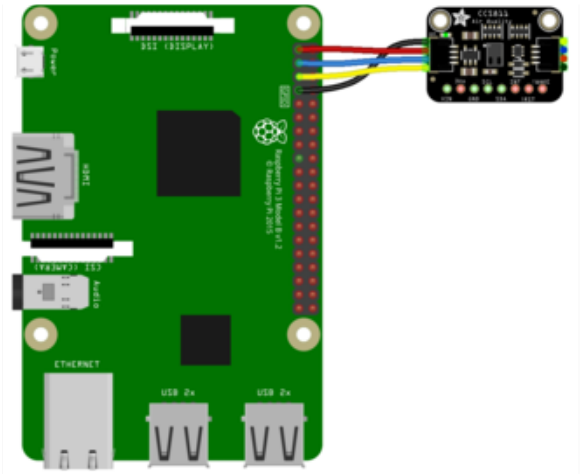

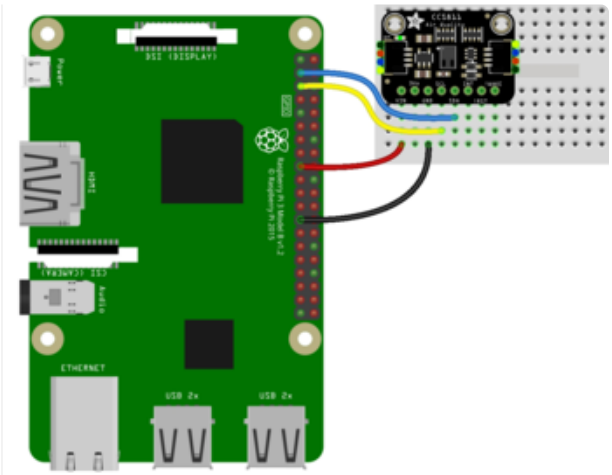

Pi 3V3 to **sensor VIN (red wire on STEMMA QT version)**
Pi GND to **sensor GND (black wire on STEMMA QT version)**
Pi SCL to **sensor SCL (yellow wire on STEMMA QT version)**
Pi SDA to **sensor SDA (blue wire on STEMMA QT version)**
Pi GND to **sensor WAKE (NOT NEEDED ON STEMMA QT VERSION)**

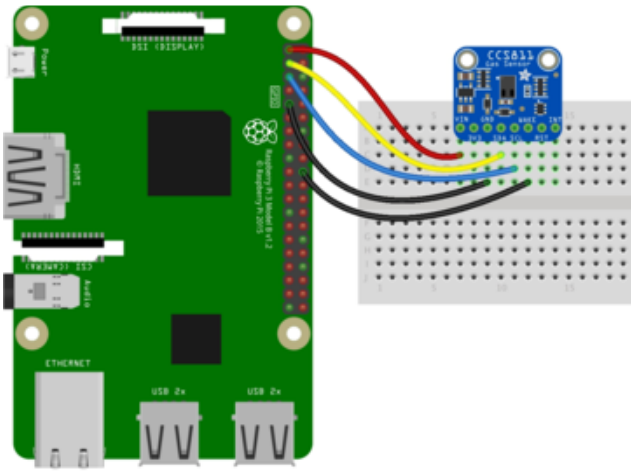

CircuitPython Installation of CCS811 Library

You'll need to install the Adafruit CircuitPython CCS811 (https://adafru.it/yaX) library on your CircuitPython board.

First make sure you are running the latest version of Adafruit CircuitPython (https://adafru.it/Amd) for your board.

Next you'll need to install the necessary libraries to use the hardware--carefully follow the steps to find and install these libraries from Adafruit's CircuitPython library bundle (https://adafru.it/uap). Our CircuitPython starter guide has a great page on how to install the library bundle (https://adafru.it/ABU).

For non-express boards like the Trinket M0 or Gemma M0, you'll need to manually install the necessary libraries from the bundle:

- **adafruit_ccs811.mpy**
- **adafruit_bus_device**

Before continuing make sure your board's lib folder or root filesystem has the **adafruit_ccs811.mpy,** and **adafruit_bus_device** files and folders copied over.

Next connect to the board's serial REPL (https://adafru.it/Awz) so you are at the CircuitPython >>> prompt.

Python Installation of CCS811 Library

You'll need to install the Adafruit_Blinka library that provides the CircuitPython support in Python. This may also require enabling I2C on your platform and verifying you are running Python 3. Since each platform is a little different, and Linux changes often, please visit the CircuitPython on Linux guide to get your computer ready (https://adafru.it/BSN)!

Once that's done, from your command line run the following command:

- `sudo pip3 install adafruit-circuitpython-ccs811`

If your default Python is version 3 you may need to run 'pip' instead. Just make sure you aren't trying to use CircuitPython on Python 2.x, it isn't supported!

CircuitPython & Python Usage

To demonstrate the usage of the sensor we'll initialize it and read the eCO2, TVOC, and temperature from the board's Python REPL.

If you're using an I2C connection run the following code to import the necessary modules and initialize the I2C connection with the sensor:

```
import time
import board
import busio
import adafruit_ccs811
i2c_bus = busio.I2C(board.SCL, board.SDA)
ccs811 = adafruit_ccs811.CCS811(i2c_bus)
```

Then you'll want to calibrate the thermistor:

Now you're ready to read values from the sensor using any of these properties:

- **eco2** - Equivalent Carbon Dioxide in parts per million. Clipped to 400 to 8192ppm.
- **tvoc** - Total Volatile Organic Compound in parts per billion.
- **temperature** - Temperature based on optional thermistor in Celsius.

For example to print eCO2, TVOC, and temperature:

```
print("CO2: %1.0f PPM" % ccs811.eco2)
print("TVOC: %1.0f PPM" % ccs811.tvoc)
print("Temp: %0.1f C" % ccs811.temperature)
```

```
>>> print("CO2: %1.0f PPM" % ccs811.eco2)
CO2: 446 PPM
>>> print("TVOC: %1.0f PPM" % ccs811.tvoc)
TVOC: 7 PPM
>>> print("Temp: %0.1f C" % ccs811.temperature)
Temp: 25.4 C
```

That's all there is to using CCS811 with Python and CircuitPython!

Full Example Code

```
# SPDX-FileCopyrightText: 2021 ladyada for Adafruit Industries
# SPDX-License-Identifier: MIT

import time
import board
import adafruit_ccs811
```

```
i2c = board.I2C()  # uses board.SCL and board.SDA
# i2c = board.STEMMA_I2C()  # For using the built-in STEMMA QT connector on a
microcontroller
ccs811 = adafruit_ccs811.CCS811(i2c)

# Wait for the sensor to be ready
while not ccs811.data_ready:
    pass

while True:
    print("CO2: {} PPM, TVOC: {} PPB".format(ccs811.eco2, ccs811.tvoc))
    time.sleep(0.5)
```

Python Docs

Python Docs (https://adafru.it/C46)

Downloads

Documents

- CCS811 Datasheet (https://adafru.it/yaV)
- CCS811 Fact sheet (https://adafru.it/ycv)
- CCS811 Mechanical Considerations App Note (https://adafru.it/ycw)
- CCS811 NTC Thermistor App Note (https://adafru.it/ycx)
- CCS811 Baseline Clear/Restore App Note (https://adafru.it/ycy)

- Adafruit CCS811 Arduino Driver (https://adafru.it/yaW)
- CCS811 CircuitPython Driver (https://adafru.it/yaX)
- Fritzing object in the Adafruit Fritzing library (https://adafru.it/aP3)
- CCS811 breakout PCB files (EAGLE format) (https://adafru.it/yaY)

Schematic and Fab Print for STEMMA QT Version

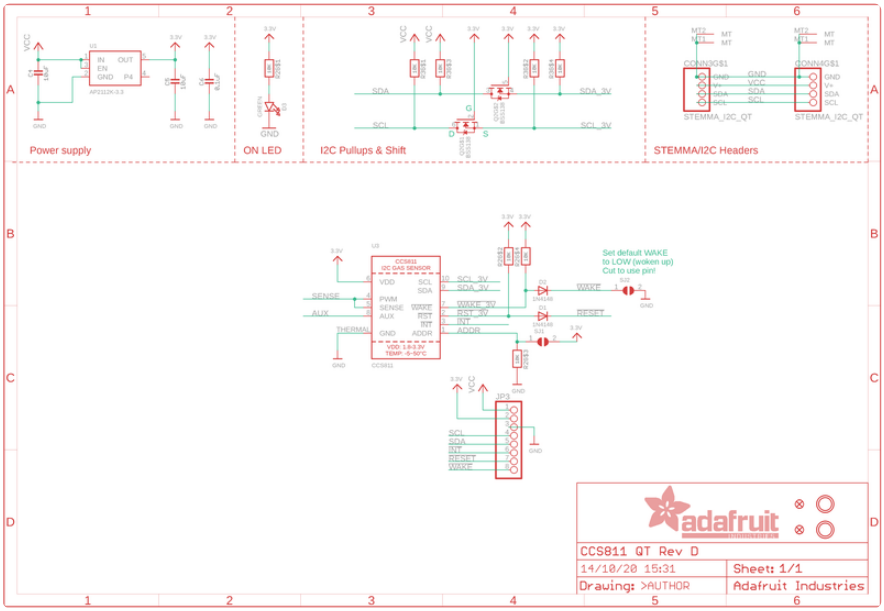

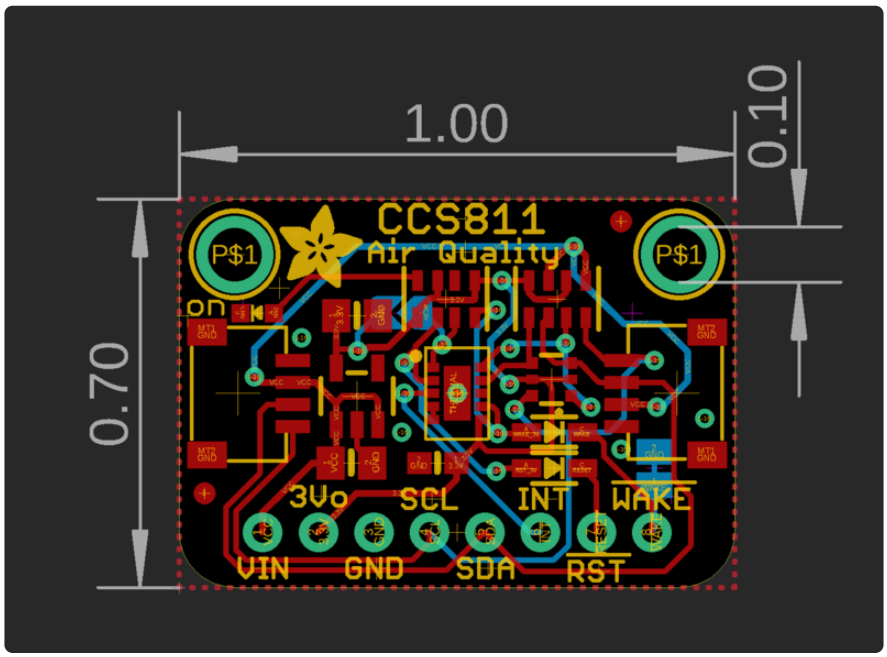

Schematic and Fab Print for Original Version

click to enlarge

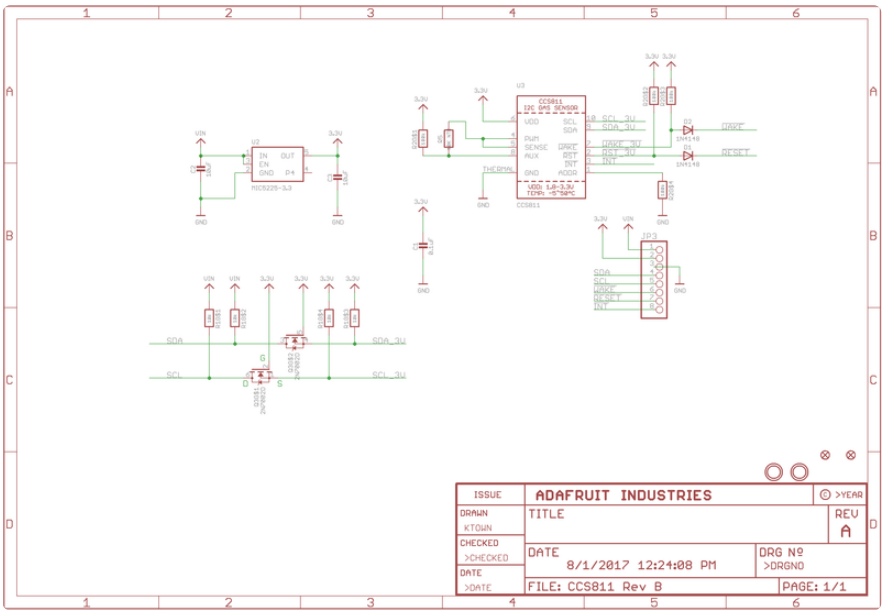

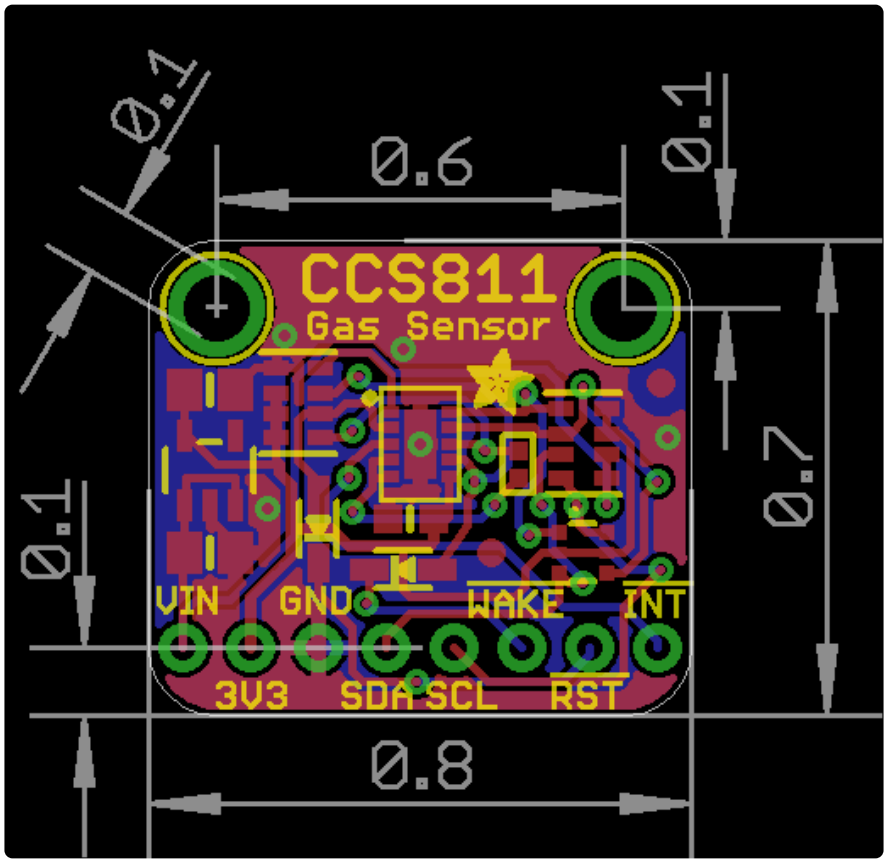

FAQ

My sensor is not reporting temperature correctly.

The initial versions of this chip had an internal thermistor. But for some reason this was removed by the vendor. They did this without revising the chip designation.

The functionality basically just vanished and all mention of it removed from the revised datasheet.

We have marked the temperature function as deprecated in our libraries. If you think you can verify you have a version with a functional thermistor, then you can probably use the temperature function. But if you are getting odd or no readings when using this function, it is likely you have the newer version of the chip with no thermistor - temperature will not work.